Cambridge Assessment International Education

Cambridge International AS & A Level

PHYSICS **9702/01**

Paper 1 Multiple Choice **For examination from 2022**

SPECIMEN PAPER **1 hour 15 minutes**

You must answer on the multiple choice answer sheet.

You will need: Multiple choice answer sheet
Soft clean eraser
Soft pencil (type B or HB is recommended)

0123456789

INSTRUCTIONS

- There are **forty** questions on this paper. Answer **all** questions.
- For each question there are four possible answers **A**, **B**, **C** and **D**. Choose the **one** you consider correct and record your choice in soft pencil on the multiple choice answer sheet.
- Follow the instructions on the multiple choice answer sheet.
- Write in soft pencil.
- Write your name, centre number and candidate number on the multiple choice answer sheet in the spaces provided unless this has been done for you.
- Do **not** use correction fluid.
- Do **not** write on any bar codes.
- You may use a calculator.

INFORMATION

- The total mark for this paper is 40.
- Each correct answer will score one mark.
- Any rough working should be done on this question paper.

This document has **18** pages. Blank pages are indicated.

© UCLES 2019

Data

acceleration of free fall	$g = 9.81\,\text{m s}^{-2}$
speed of light in free space	$c = 3.00 \times 10^{8}\,\text{m s}^{-1}$
elementary charge	$e = 1.60 \times 10^{-19}\,\text{C}$
unified atomic mass unit	$1\,\text{u} = 1.66 \times 10^{-27}\,\text{kg}$
rest mass of proton	$m_\text{p} = 1.67 \times 10^{-27}\,\text{kg}$
rest mass of electron	$m_\text{e} = 9.11 \times 10^{-31}\,\text{kg}$
Avogadro constant	$N_\text{A} = 6.02 \times 10^{23}\,\text{mol}^{-1}$
molar gas constant	$R = 8.31\,\text{J K}^{-1}\,\text{mol}^{-1}$
Boltzmann constant	$k = 1.38 \times 10^{-23}\,\text{J K}^{-1}$
gravitational constant	$G = 6.67 \times 10^{-11}\,\text{N m}^2\,\text{kg}^{-2}$
permittivity of free space	$\varepsilon_0 = 8.85 \times 10^{-12}\,\text{F m}^{-1}$ $\left(\frac{1}{4\pi\varepsilon_0} = 8.99 \times 10^{9}\,\text{m F}^{-1}\right)$
Planck constant	$h = 6.63 \times 10^{-34}\,\text{J s}$
Stefan–Boltzmann constant	$\sigma = 5.67 \times 10^{-8}\,\text{W m}^{-2}\,\text{K}^{-4}$

Formulae

uniformly accelerated motion	$s = ut + \frac{1}{2}at^2$ $v^2 = u^2 + 2as$
hydrostatic pressure	$\Delta p = \rho g \Delta h$
upthrust	$F = \rho g V$
Doppler effect for sound waves	$f_\text{o} = \frac{f_\text{s} v}{v \pm v_\text{s}}$
electric current	$I = Anvq$
resistors in series	$R = R_1 + R_2 + \ldots$
resistors in parallel	$\frac{1}{R} = \frac{1}{R_1} + \frac{1}{R_2} + \ldots$

© UCLES 2019

1 A student creates a table to show reasonable estimates of some physical quantities.

Which row is **not** a reasonable estimate?

	quantity	value
A	electric current in a fan heater	12A
B	mass of an adult person	70 kg
C	maximum speed of an Olympic sprint runner	$10\,m\,s^{-1}$
D	water pressure at the bottom of a garden pond	10^6 Pa

2 Which expression has the same SI base units as pressure?

A $\dfrac{\text{force}}{\text{length} \times \text{speed}}$

B $\dfrac{\text{force}}{\text{length} \times \text{time}}$

C $\dfrac{\text{mass}}{\text{length} \times (\text{time})^2}$

D $\dfrac{\text{mass} \times (\text{time})^2}{\text{length}}$

3 The speed v of a liquid leaving a tube depends on the change in pressure ΔP and the density ρ of the liquid. The speed is given by the equation

$$v = k\left(\frac{\Delta P}{\rho}\right)^n$$

where k is a constant that has no units.

What is the value of n?

A $\frac{1}{2}$ **B** 1 **C** $\frac{3}{2}$ **D** 2

© UCLES 2019

4 Which row correctly describes the quantities momentum, power and temperature?

	momentum	power	temperature
A	scalar	scalar	vector
B	scalar	vector	vector
C	vector	scalar	scalar
D	vector	vector	scalar

5 A girl throws a ball vertically upwards. It takes a time of 3.20 s to return to her hand.

Assume air resistance is negligible.

What is the initial speed with which the ball is thrown?

A $3.07\,m\,s^{-1}$ **B** $7.85\,m\,s^{-1}$ **C** $15.7\,m\,s^{-1}$ **D** $31.4\,m\,s^{-1}$

6 A radio-controlled toy car travels along a straight line for a time of 15 s.

The variation with time t of the velocity v of the car is shown.

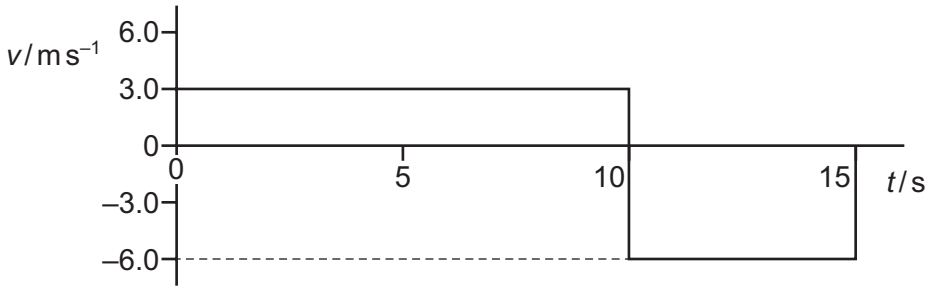

What is the average velocity of the toy car for the journey shown by the graph?

A $-1.5\,m\,s^{-1}$ **B** $0.0\,m\,s^{-1}$ **C** $4.0\,m\,s^{-1}$ **D** $4.5\,m\,s^{-1}$

7 The acceleration of free fall on Pluto is $0.66\,m\,s^{-2}$.

An object weighs 6.0 N on Earth.

What would this object weigh on Pluto?

A 0.40 N **B** 0.93 N **C** 4.0 N **D** 39 N

© UCLES 2019

8 A stationary firework explodes into three pieces moving in the same plane. The masses and the velocities of the three pieces immediately after the explosion are shown.

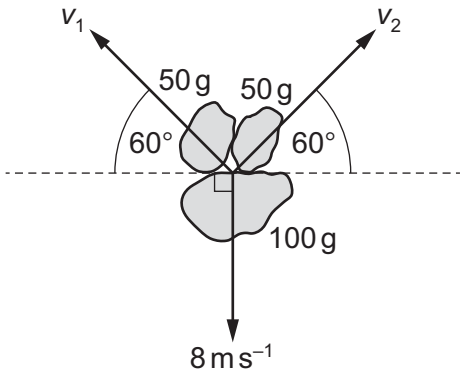

What are speeds v_1 and v_2?

	v_1 / m s^{-1}	v_2 / m s^{-1}
A	4.0	4.0
B	9.2	9.2
C	14	14
D	16	16

© UCLES 2019

[Turn over

9 An object is dropped at time $t = 0$ from a high building. Air resistance is significant.

Three graphs are plotted against time:

- the height of the object above the ground
- the speed of the object
- the magnitude of the resultant force on the object.

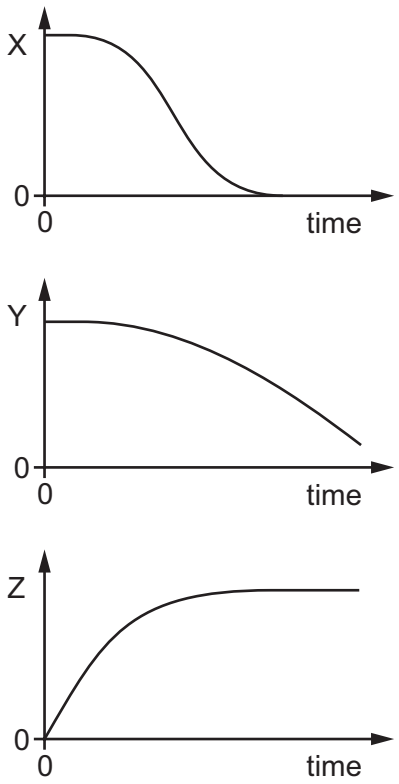

What are the quantities X, Y and Z?

	height of the object above the ground	speed of the object	magnitude of the resultant force on the object
A	X	Y	Z
B	X	Z	Y
C	Y	Z	X
D	Z	Y	X

© UCLES 2019

10 An object hangs by means of two cords around two rods, as shown.

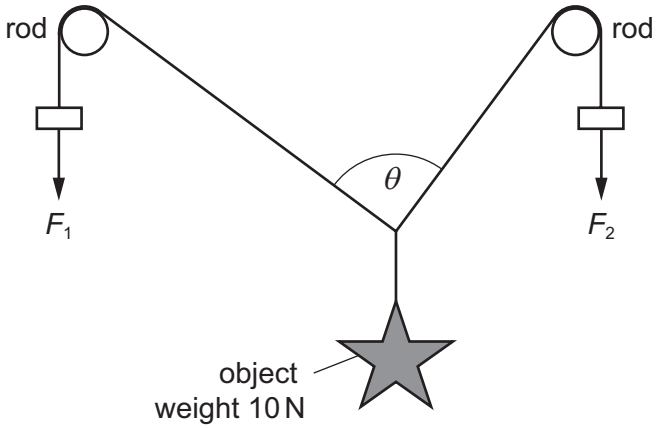

The object is held in equilibrium by the forces F_1 and F_2. The object weighs 10 N. There is negligible friction between the rods and cords.

Which row of the table gives an angle θ of 90°?

	F_1 / N	F_2 / N
A	4.0	6.0
B	6.0	4.0
C	6.0	8.0
D	8.0	6.0

11 Which force is caused by a difference in hydrostatic pressure?

A friction **B** upthrust **C** viscous force **D** weight

12 A car of mass 1400 kg is travelling on a straight, horizontal road at a constant speed of 25 m s^{-1}. The useful output power from the car's engine is 30 kW.

The car then travels up a slope at 2.0° to the horizontal, maintaining the same constant speed.



What is the useful output power of the car's engine when travelling up the slope?

A 12 kW **B** 31 kW **C** 42 kW **D** 65 kW

13 The diagram shows four forces applied to a circular object.

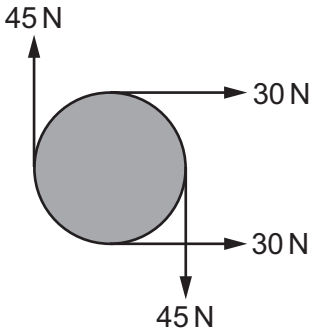

Which row describes the resultant force and resultant torque on the object?

	resultant force	resultant torque
A	non-zero	non-zero
B	non-zero	zero
C	zero	non-zero
D	zero	zero

14 A uniform horizontal footbridge is 12.0 m long and weighs 4000 N.

It rests on two supports X and Y, as shown.

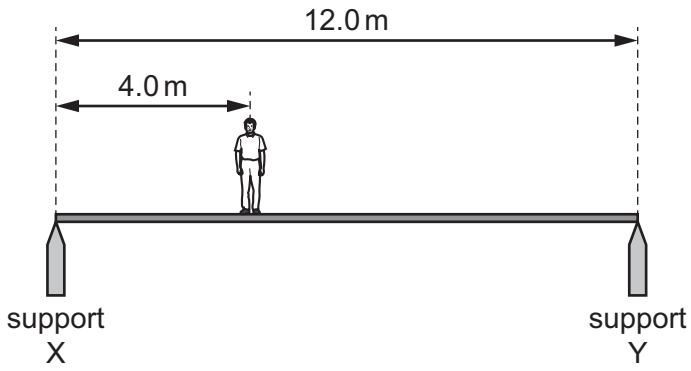

A man of weight 600 N stands a distance of 4.0 m from support X.

What is the upward force on the footbridge from support X?

A 2200 N **B** 2300 N **C** 2400 N **D** 2600 N

15 A metal block has a mass of 750 g. Magnesium makes up 60% of the mass and the remaining 40% is copper.

The density of magnesium is $1.7\,g\,cm^{-3}$.

The density of copper is $9.0\,g\,cm^{-3}$.

What is the density of the block?

A $2.5\,g\,cm^{-3}$ **B** $4.6\,g\,cm^{-3}$ **C** $5.4\,g\,cm^{-3}$ **D** $10.7\,g\,cm^{-3}$

16 A man climbs slowly at a steady speed to the top of a ladder.

What is the **main** energy transfer taking place for the man as he climbs?

A chemical potential to gravitational potential

B chemical potential to kinetic

C kinetic to gravitational potential

D thermal (heat) to kinetic

17 A bead is released from rest at point P and slides along a wire, as shown.

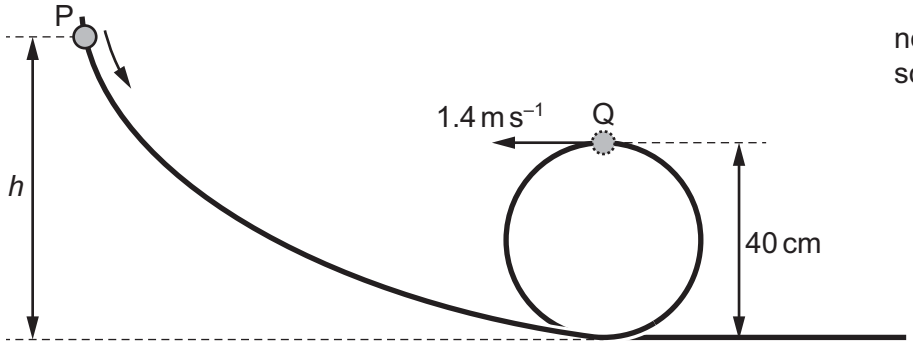

The wire loops around and forms a vertical circle of diameter 40 cm. At point Q, the bead has a speed of $1.4\,m\,s^{-1}$.

Air resistance and friction on the wire are negligible.

What is the height *h* from which the bead is released?

A 0.30 m **B** 0.40 m **C** 0.50 m **D** 0.60 m

18 A mass is raised vertically. In time t, the increase in its gravitational potential energy is E_p and the increase in its kinetic energy is E_k.

What is the average power input to the mass?

A $(E_p - E_k)t$ **B** $(E_p + E_k)t$ **C** $\frac{E_p - E_k}{t}$ **D** $\frac{E_p + E_k}{t}$

19 Water flows from a lake into a turbine that is a vertical distance of 90 m below the lake, as shown.

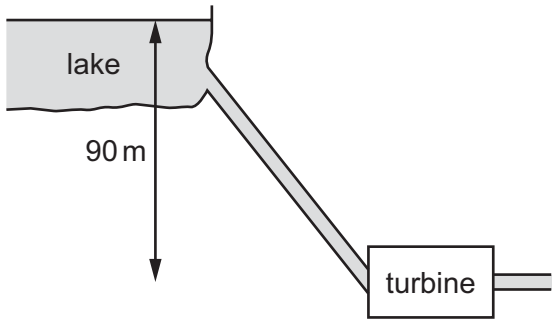

The mass flow rate of the water is 2400 kg min^{-1}. The turbine has an efficiency of 75%.

What is the output power of the turbine?

A 26 kW **B** 35 kW **C** 1.6 MW **D** 2.1 MW

20 A wire of diameter d and length l hangs vertically from a fixed point. The wire is extended by hanging a mass M on its end. The Young modulus of the wire is E. The acceleration of free fall is g.

Which equation is used to determine the extension x of the wire?

A $x = \frac{Ml}{\pi dE}$ **B** $x = \frac{Mgl}{\pi d^2 E}$ **C** $x = \frac{4Mgl}{\pi dE}$ **D** $x = \frac{4Mgl}{\pi d^2 E}$

© UCLES 2019

21 A wave has period T, wavelength λ and amplitude A. The wave is shown on a graph of displacement x against distance d.

Which graph is correctly labelled?

A

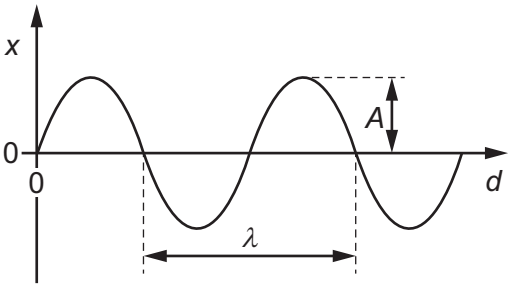

B

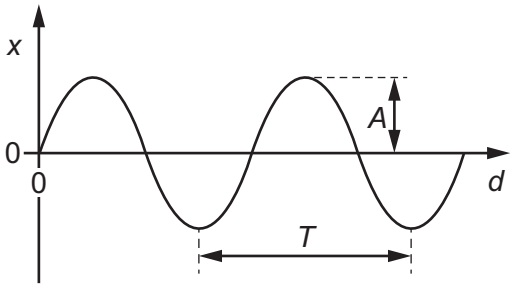

C

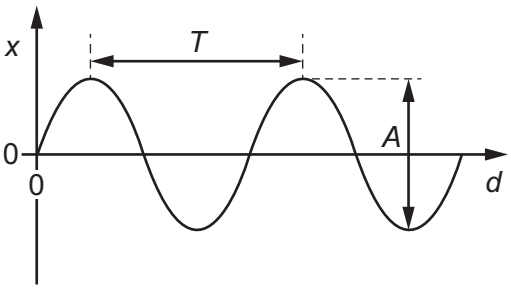

D

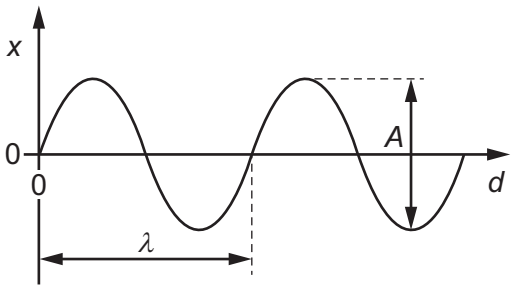

22 A vehicle emits sound of a constant frequency. A stationary observer hears the sound.

The vehicle moves directly towards the observer at constant speed. The observer hears sound of frequency f_o.

The vehicle then accelerates, still moving towards the observer, travels at a higher steady speed for a time and then decelerates until it stops.

What is the variation in the frequency of the sound that is heard by the observer?

A The observed frequency will fall, then remain steady then return to the frequency f_o.

B The observed frequency will fall, then remain steady then rise to a higher frequency than f_o.

C The observed frequency will rise, then remain steady then fall to a lower frequency than f_o.

D The observed frequency will rise, then remain steady then return to the frequency f_o.

23 A car travelling in a straight line at a speed of $30\,m\,s^{-1}$ passes near a stationary observer while sounding its horn. The frequency of sound emitted by the horn is 400 Hz.

The speed of sound in air is $336\,m\,s^{-1}$.

What is the change in the frequency of the sound heard by the observer as the car passes?

A 39 Hz **B** 66 Hz **C** 72 Hz **D** 78 Hz

© UCLES 2019

24 Which list shows electromagnetic waves in order of increasing frequency?

A radio waves → gamma-rays → ultraviolet → infrared

B radio waves → infrared → ultraviolet → gamma-rays

C ultraviolet → gamma-rays → radio waves → infrared

D ultraviolet → infrared → radio waves → gamma-rays

25 The diagram shows a steel wire fixed at one end. The other end is attached to a weight hanging over a pulley.

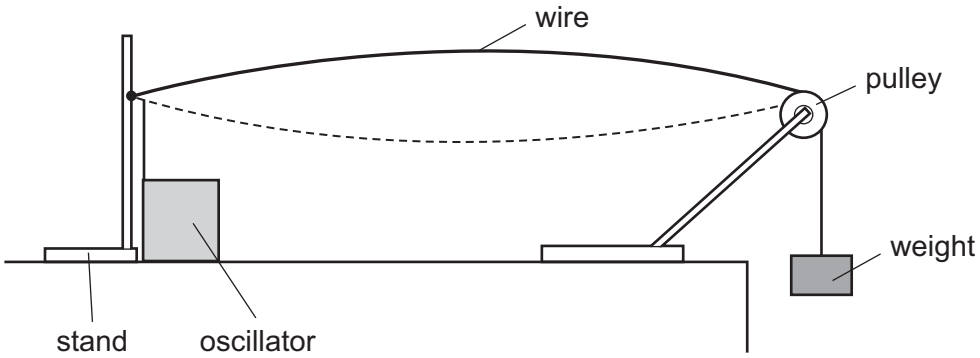

An oscillator is attached to the wire near the fixed end. A stationary wave with one loop is produced. The frequency of the oscillator is f.

Which frequency of the oscillator produces a stationary wave with two loops?

A $\frac{f}{4}$ **B** $\frac{f}{2}$ **C** $2f$ **D** $4f$

26 Which statement gives a condition that enables diffraction to occur?

A A source of waves moves towards a stationary observer.

B A wave is partially blocked by an obstacle.

C Two coherent waves are superposed.

D Two waves are travelling through the same part of a medium in opposite directions.

27 A parallel beam of light of wavelength 600 nm is incident normally on a diffraction grating. The grating has 300 lines per millimetre.

What is the total number of intensity maxima from the grating?

A 1 **B** 3 **C** 11 **D** 13

© UCLES 2019

28 A pattern of interference fringes is produced using a red laser, a double slit and a screen. The screen is 3.5 m from the double slit. The light from the laser has a wavelength of 640 nm.

The pattern of fringes is shown.

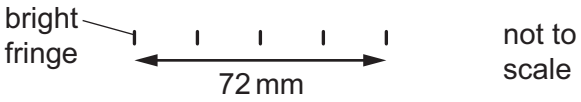

What is the separation of the slits?

A 1.2×10^{-4} m **B** 1.6×10^{-4} m **C** 3.1×10^{-5} m **D** 3.3×10^{-9} m

29 The diagram shows the symbol for a wire carrying a current I.

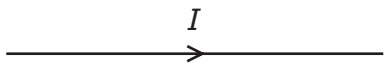

What does this current represent?

A the charge flowing past a point in the wire per unit time

B the number of electrons flowing past a point in the wire per unit time

C the number of positive nuclei flowing past a point in the wire per unit time

D the number of protons flowing past a point in the wire per unit time

30 An electric current I is given by the formula $I = Anvq$.

What do each of the symbols represent for an electric current in a metal wire?

	A	*n*	*v*	*q*
A	area of cross-section	number of free electrons	voltage	charge of each nucleus
B	area of cross-section	number of free electrons per unit volume	average drift speed of free electrons	charge of each electron
C	current	number of free electrons	average drift speed of free electrons	charge of each nucleus
D	current	number of free electrons per unit volume	voltage	charge of each electron

31 Which values of current and resistance will produce a rate of energy transfer of $16\,J\,s^{-1}$?

	current / A	resistance / Ω
A	1	4
B	2	2
C	2	8
D	4	1

32 A coil contains N turns of insulated copper wire wound on to a cylinder of diameter D. The copper wire has diameter d. The resistivity of copper is ρ. Diameter D is much greater than diameter d.

What is the total resistance between the two ends of the coil of copper wire?

A $\frac{4N\rho D}{d^2}$ **B** $\frac{4N\rho d}{D^2}$ **C** $\frac{8N\rho D}{d^2}$ **D** $\frac{8N\rho d}{D^2}$

33 Two cells are connected to a load resistor of resistance 3.0 Ω. The electromotive force (e.m.f.) and the internal resistance of each of the cells are shown.

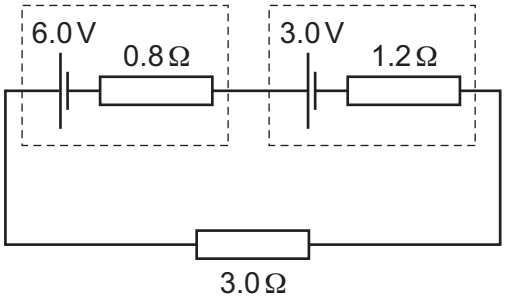

What is the current in the load resistor?

A 0.60A **B** 1.2A **C** 1.8A **D** 3.0A

© UCLES 2019

34 The diagram shows a simple circuit.

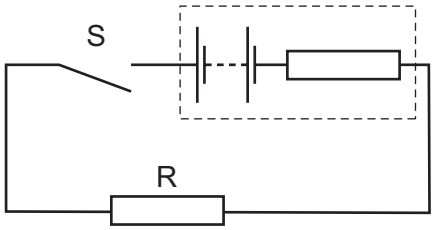

Which statement is correct?

A When switch S is closed, the e.m.f. of the battery falls because work is done against the internal resistance of the battery.

B When switch S is closed, the e.m.f. of the battery falls because work is done against the resistance of R.

C When switch S is closed, the potential difference across the battery falls because work is done against the internal resistance of the battery.

D When switch S is closed, the potential difference across the battery falls because work is done against the resistance of R.

35 Six resistors, each of resistance *R*, are connected as shown.

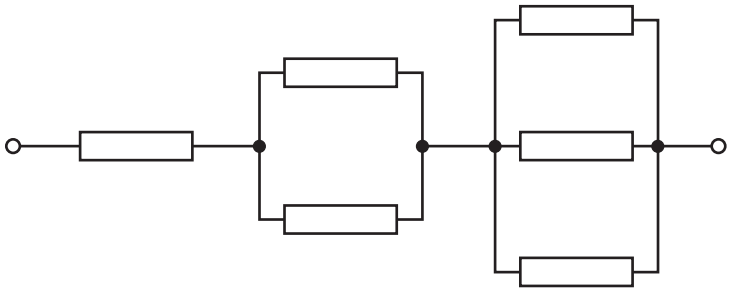

The combined resistance is 66 kΩ.

What is the value of *R*?

A 11 kΩ **B** 18 kΩ **C** 22 kΩ **D** 36 kΩ

© UCLES 2019

36 A cell has a constant electromotive force and a constant internal resistance.

A thermistor is connected between the terminals of the cell.

The temperature of the thermistor is increased.

Which statement about the change of the cell's terminal potential difference (p.d.) is correct?

A The terminal p.d. is decreased because more work is done moving unit charge through the internal resistance of the cell.

B The terminal p.d. is decreased because the current in the thermistor is decreased.

C The terminal p.d. is increased because more work is done moving unit charge through the thermistor.

D The terminal p.d. is increased because the current in the thermistor is increased.

37 A battery with negligible internal resistance is connected in series with a resistor and a light-dependent resistor (LDR) as shown.

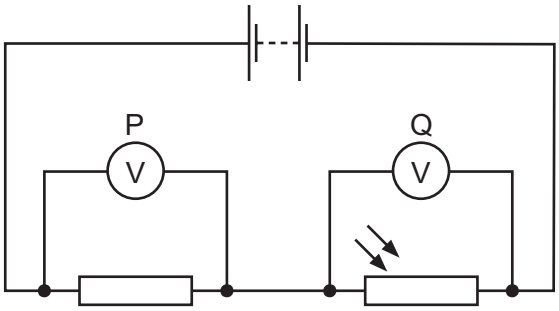

The light intensity on the LDR is decreased.

How do the readings of the voltmeters change?

	reading on voltmeter P	reading on voltmeter Q
A	decreases	decreases
B	decreases	increases
C	increases	decreases
D	increases	increases

38 A radioactive nucleus is formed by β^- decay. This nucleus then decays by α-emission.

Which graph of nucleon number *N* plotted against proton number *Z* shows the β^- decay followed by the α-emission?

A

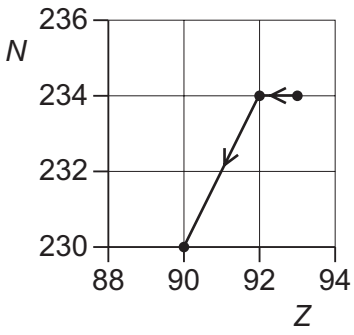

B

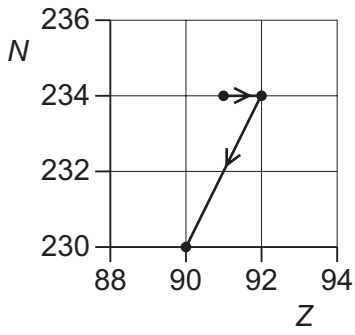

C

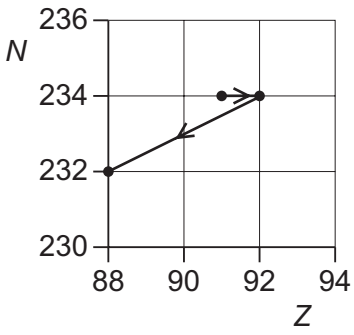

D

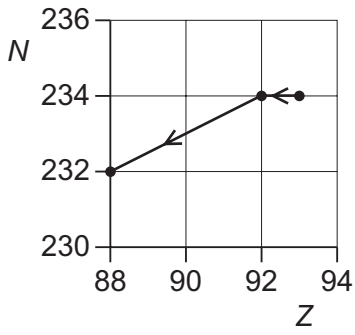

39 What are the structures of the proton and of the neutron in terms of quarks?

	proton		neutron	
	up quark	down quark	up quark	down quark
A	1	1	2	2
B	1	2	2	1
C	2	1	1	2
D	2	2	1	1

40 What is the charge of a top antiquark?

A $-\frac{2}{3}$ **B** $-\frac{1}{3}$ **C** $+\frac{1}{3}$ **D** $+\frac{2}{3}$

© UCLES 2019

BLANK PAGE

Permission to reproduce items where third-party owned material protected by copyright is included has been sought and cleared where possible. Every reasonable effort has been made by the publisher (UCLES) to trace copyright holders, but if any items requiring clearance have unwittingly been included, the publisher will be pleased to make amends at the earliest possible opportunity.

Cambridge Assessment International Education is part of the Cambridge Assessment Group. Cambridge Assessment is the brand name of the University of Cambridge Local Examinations Syndicate (UCLES), which itself is a department of the University of Cambridge.

© UCLES 2019